A
101

PLAN : Pool Deck

Seating & Shower Area 1: 50

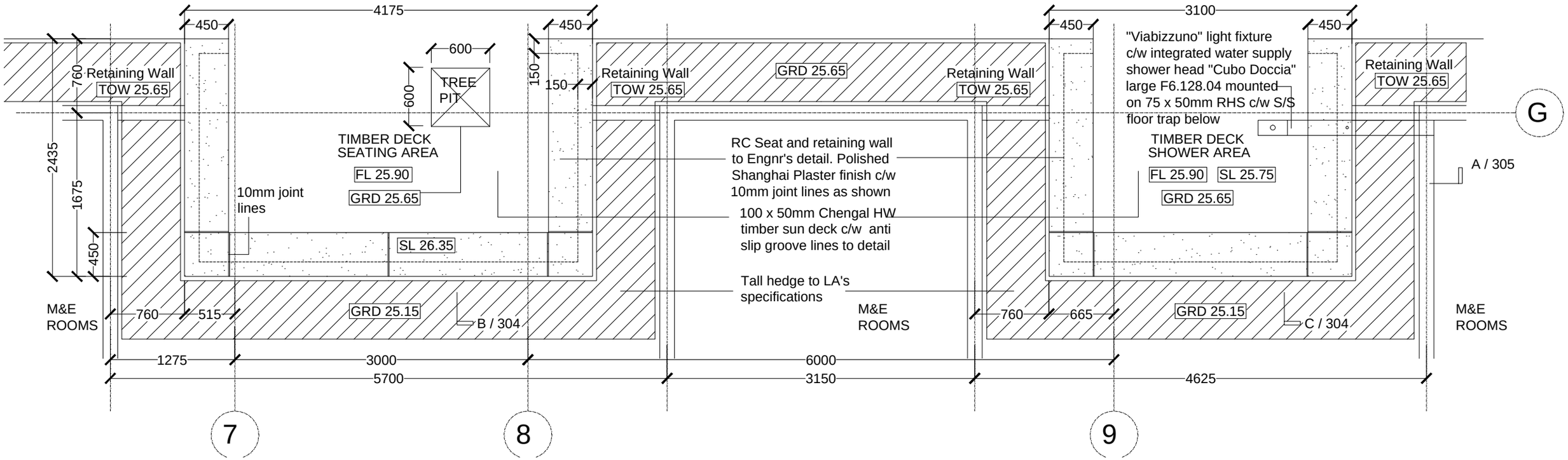

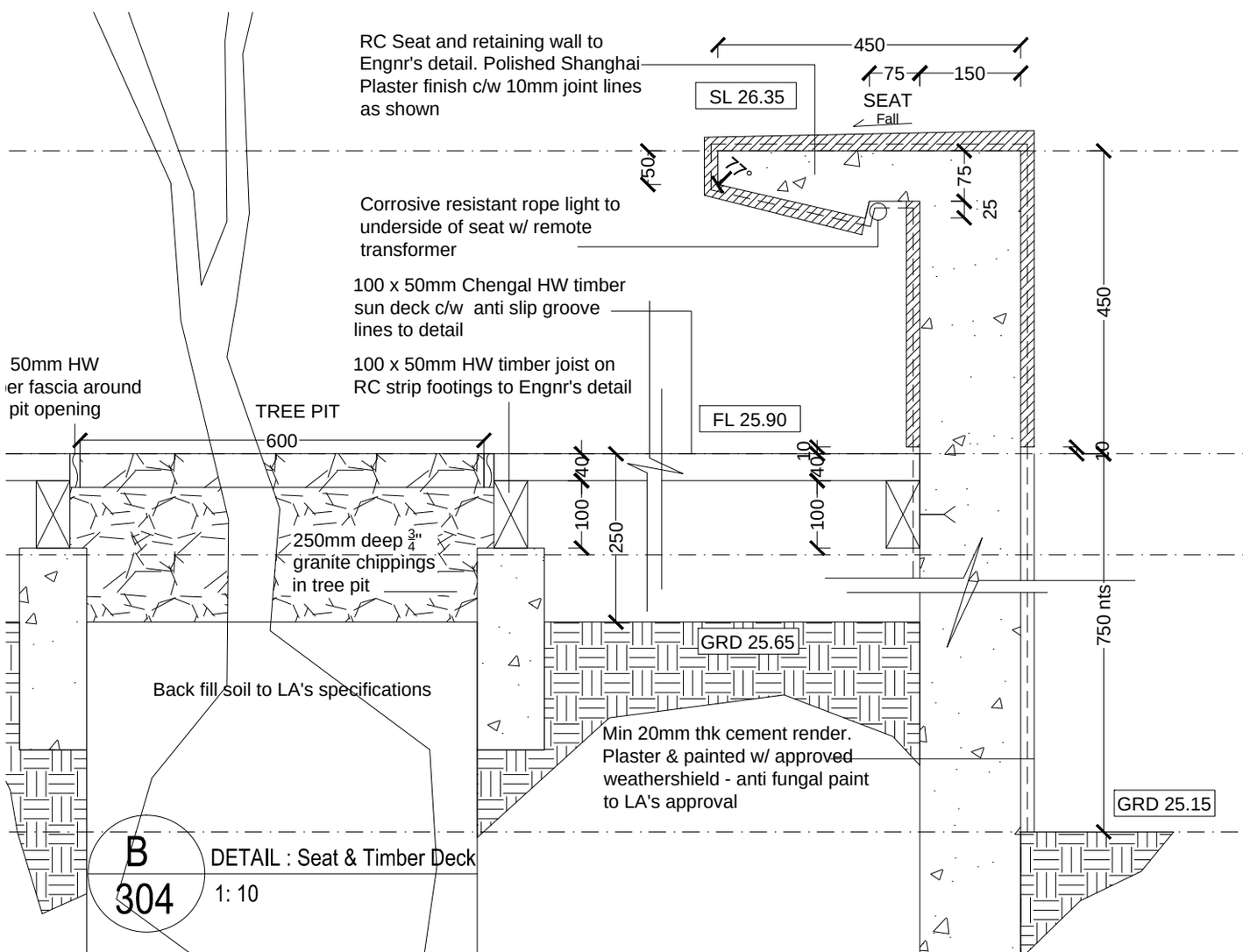

B
304

DETAIL : Seat & Timber Deck

1: 10

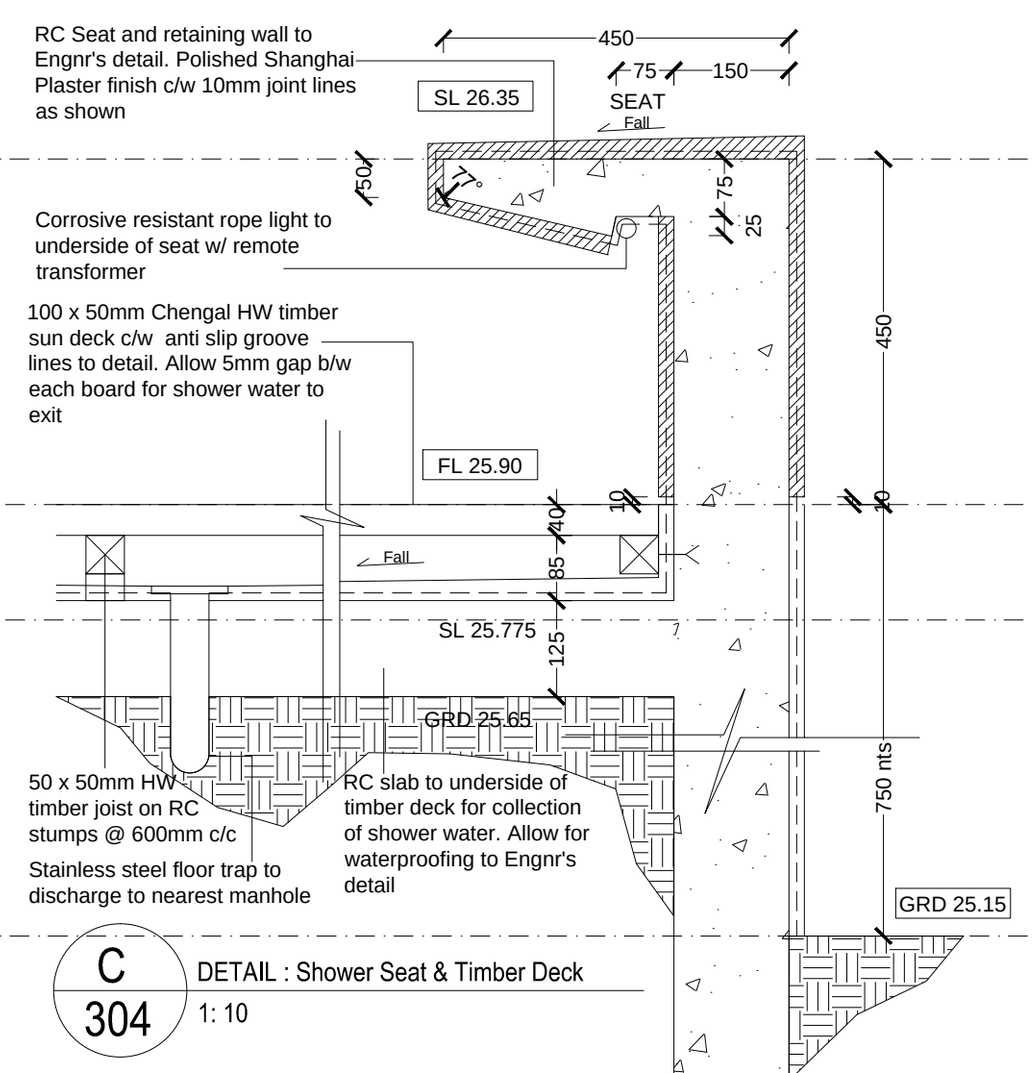

C
304

DETAIL : Shower Seat & Timber Deck

1: 10