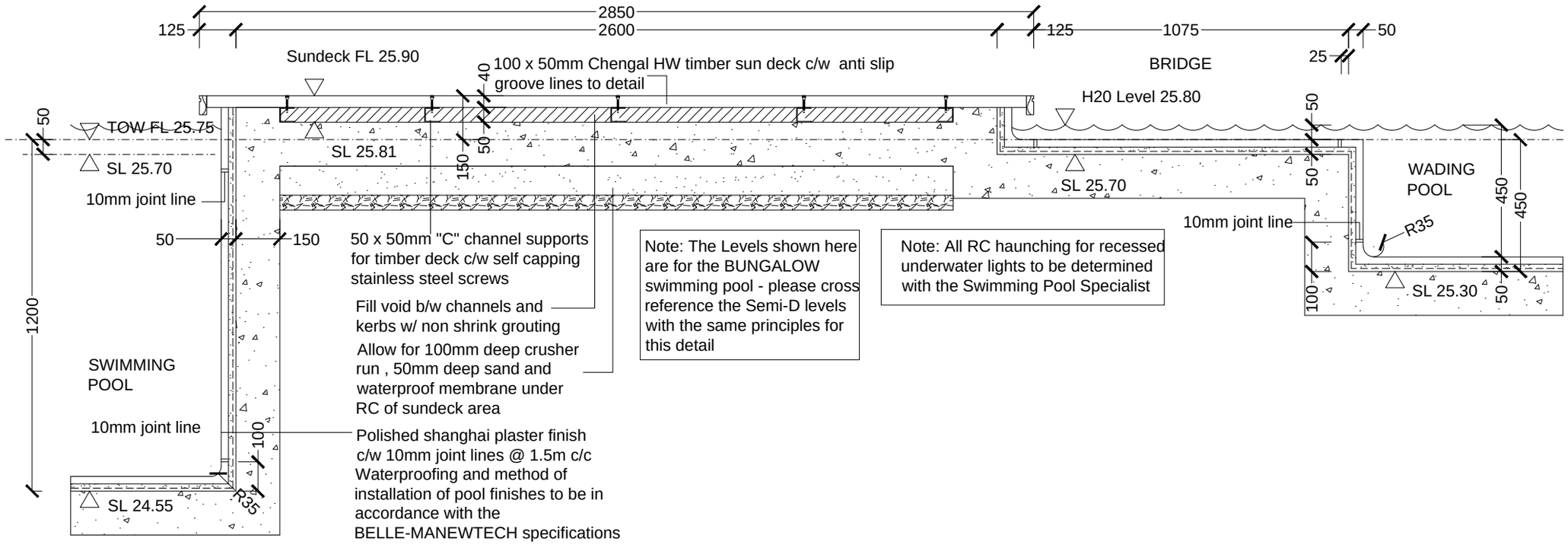

A 302 DETAIL: Bubbler Ledge 1: 25

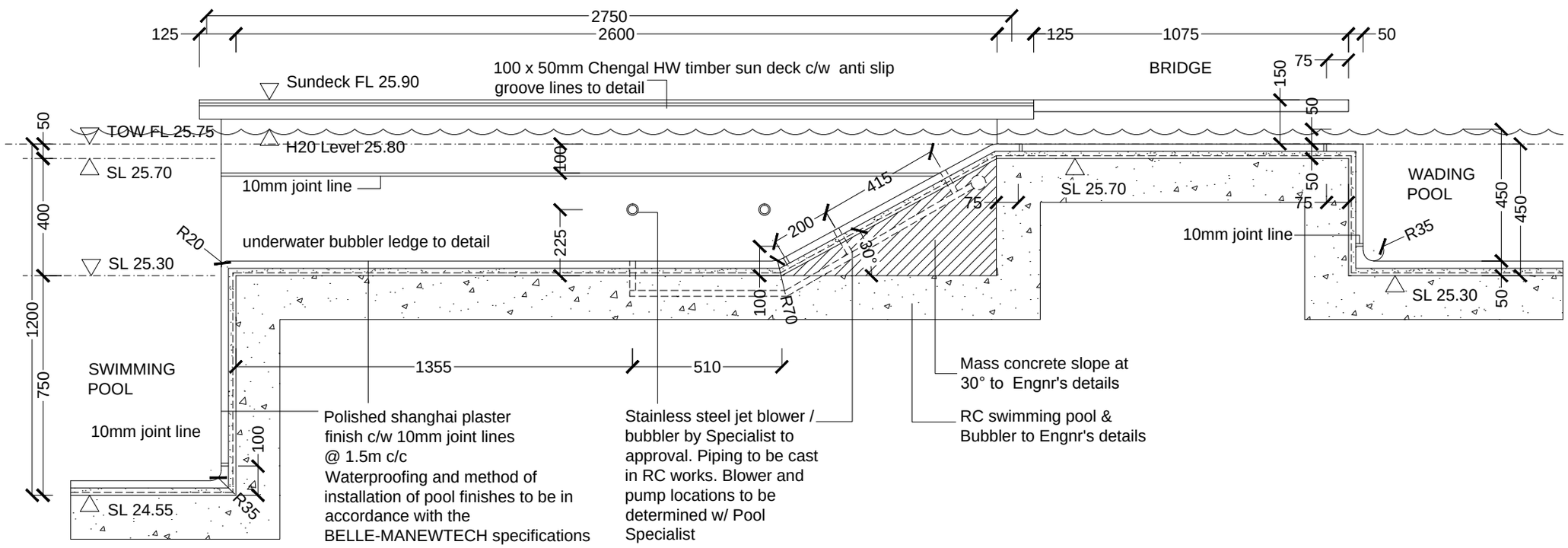

B 302 DETAIL: Bubbler Ledge 1: 25