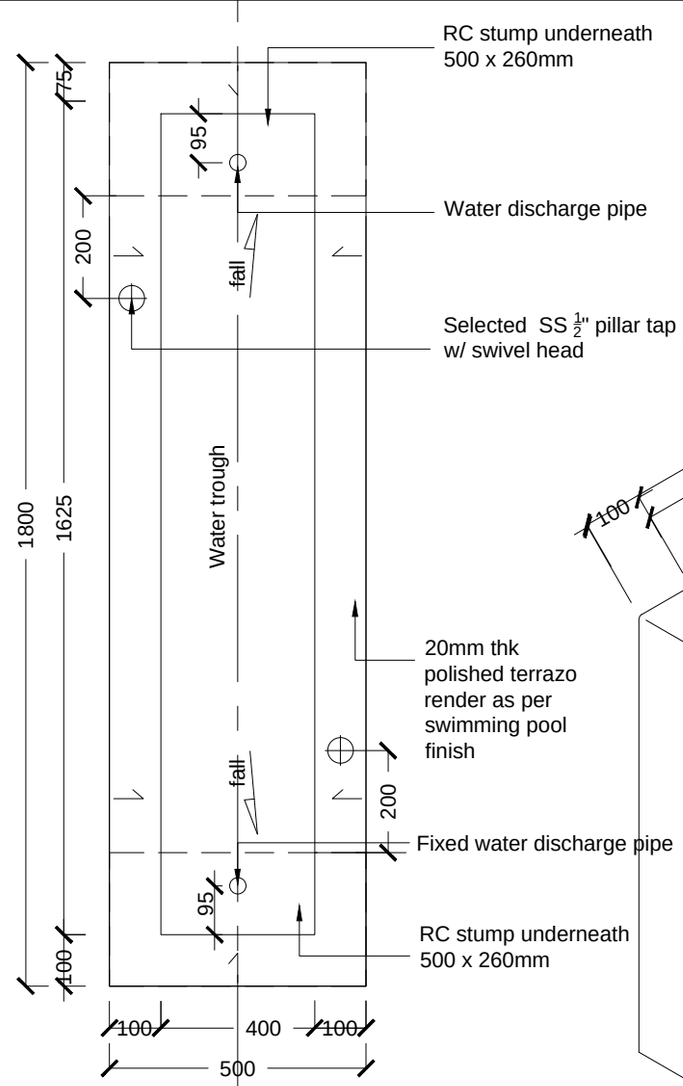

DETAIL : PLAN
Scale 1:15

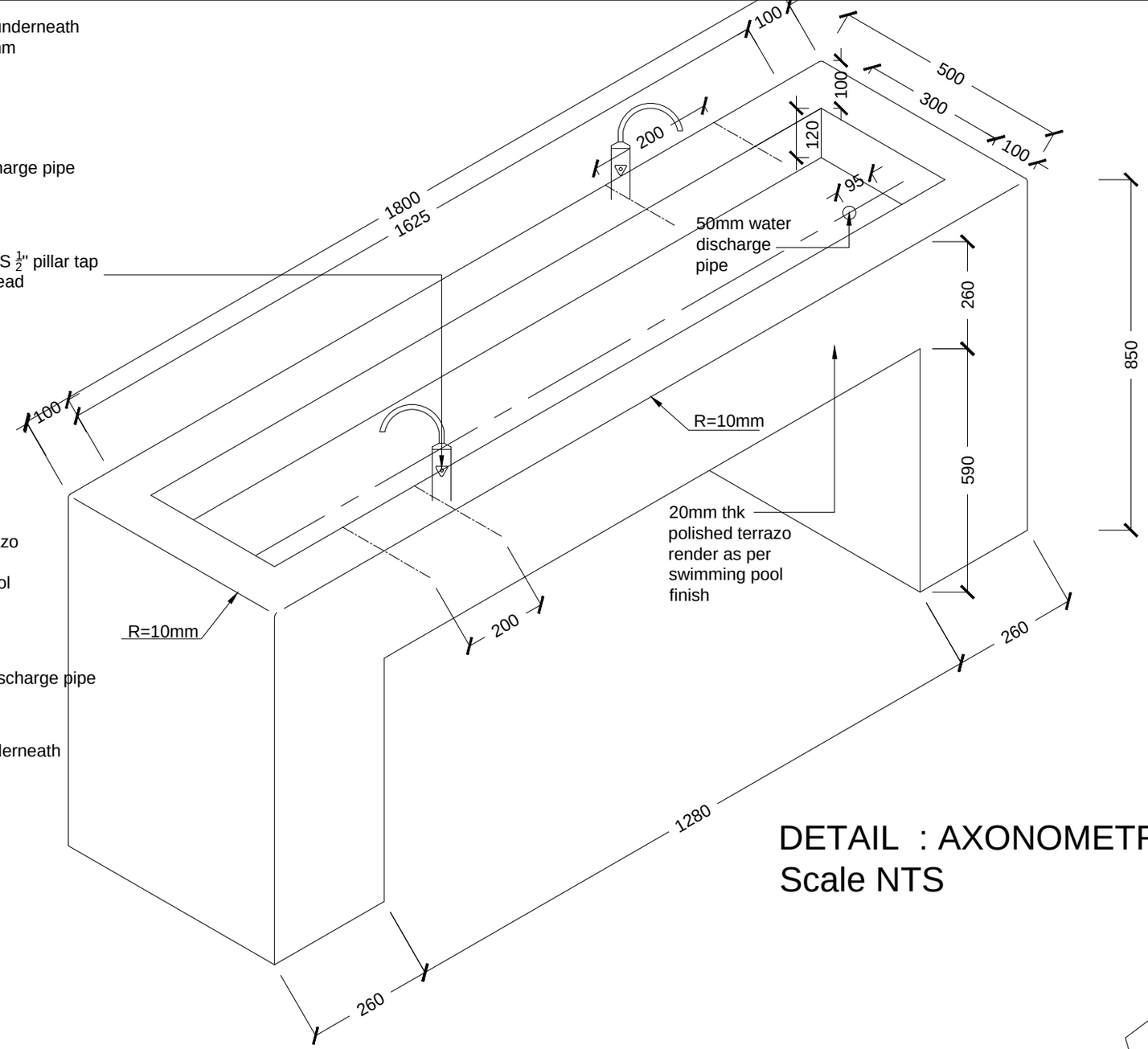

DETAIL : AXONOMETRIC
Scale NTS

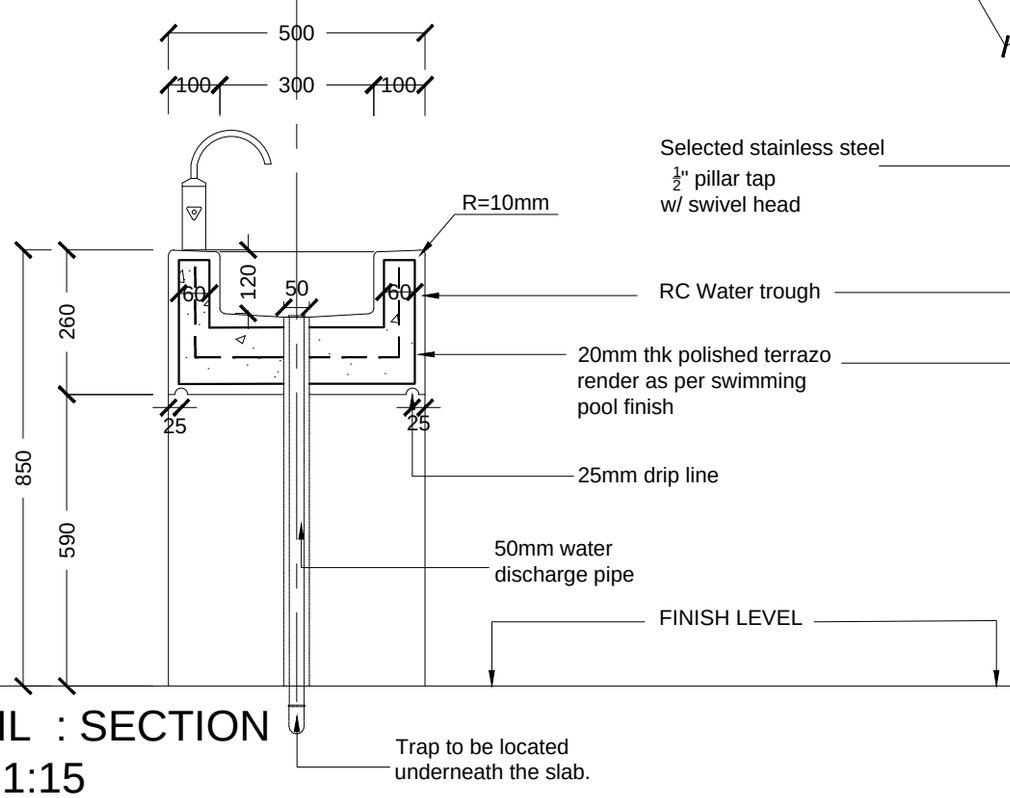

DETAIL : SECTION
Scale 1:15

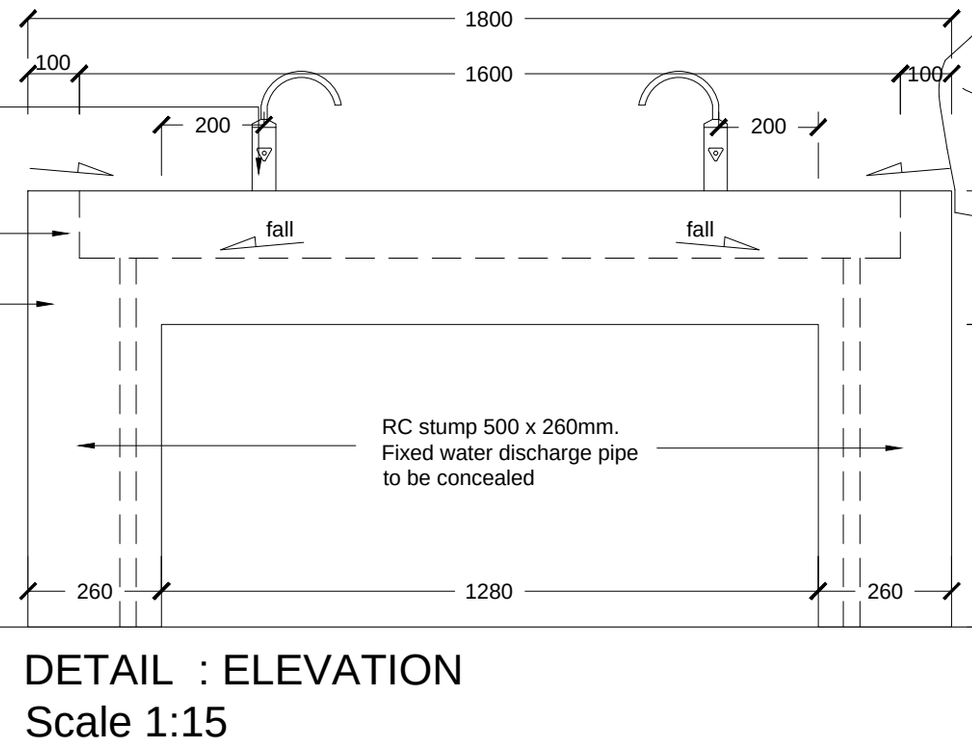
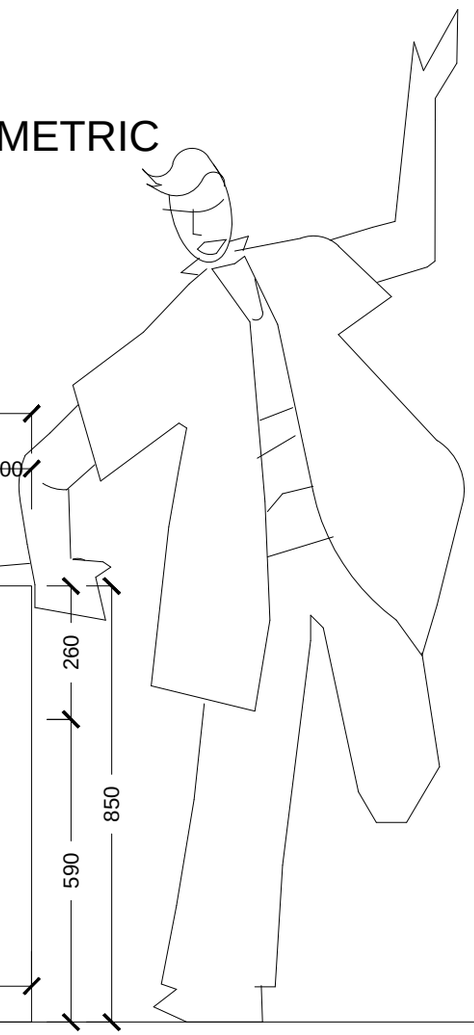
DETAIL : ELEVATION
Scale 1:15