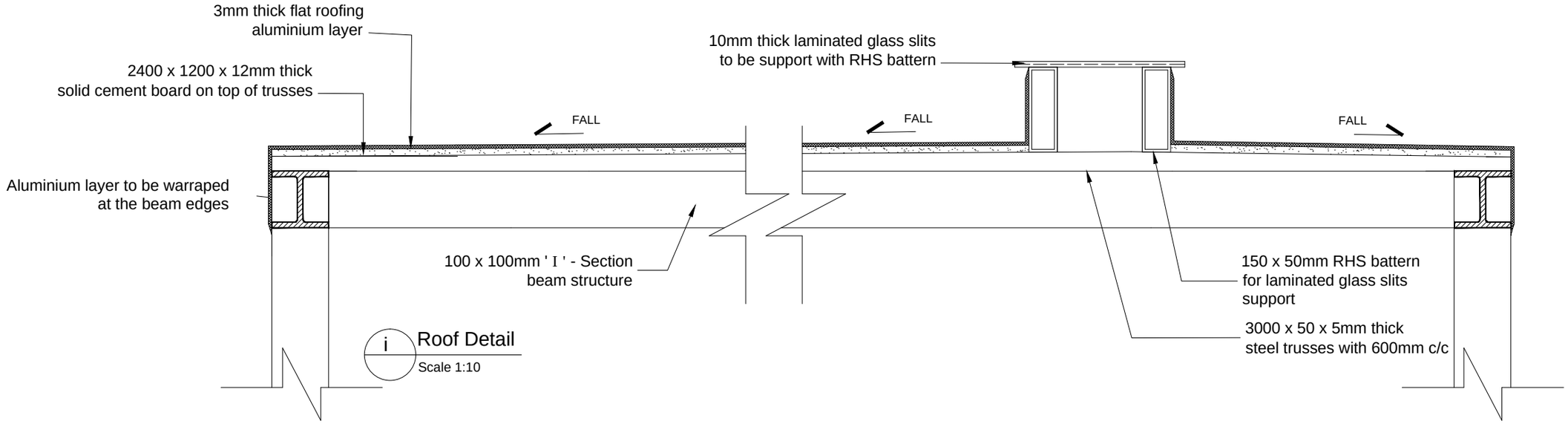

i Roof Detail
Scale 1:10

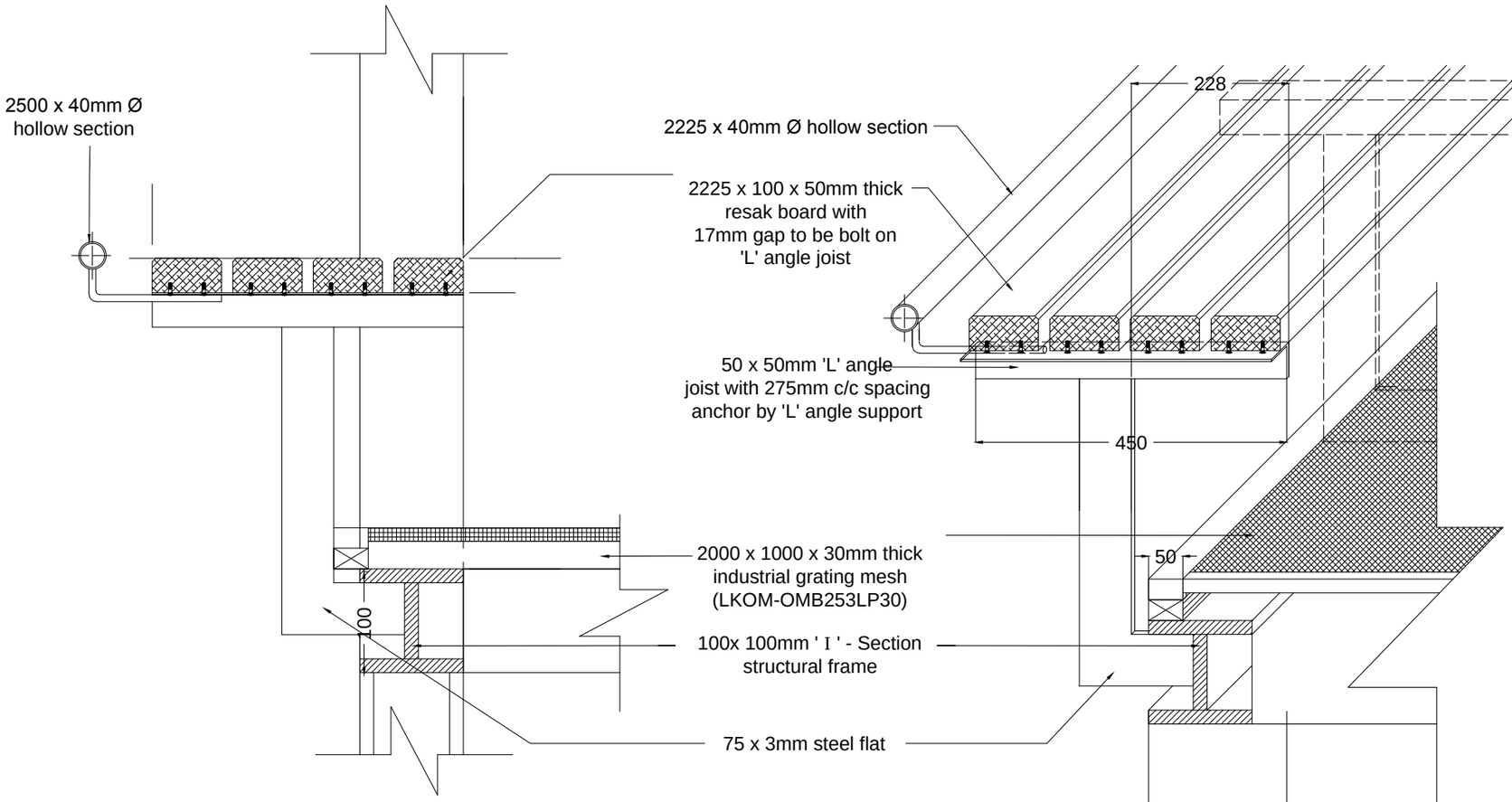

DETAIL - Timber Bench
Scale 1:10

NOTE:

1. All timber to be RESAK.

2. All timber to be painted with Thompson water seal strictly according to manufacturer's spec.

3. All bolts and fixtures to be stainless.

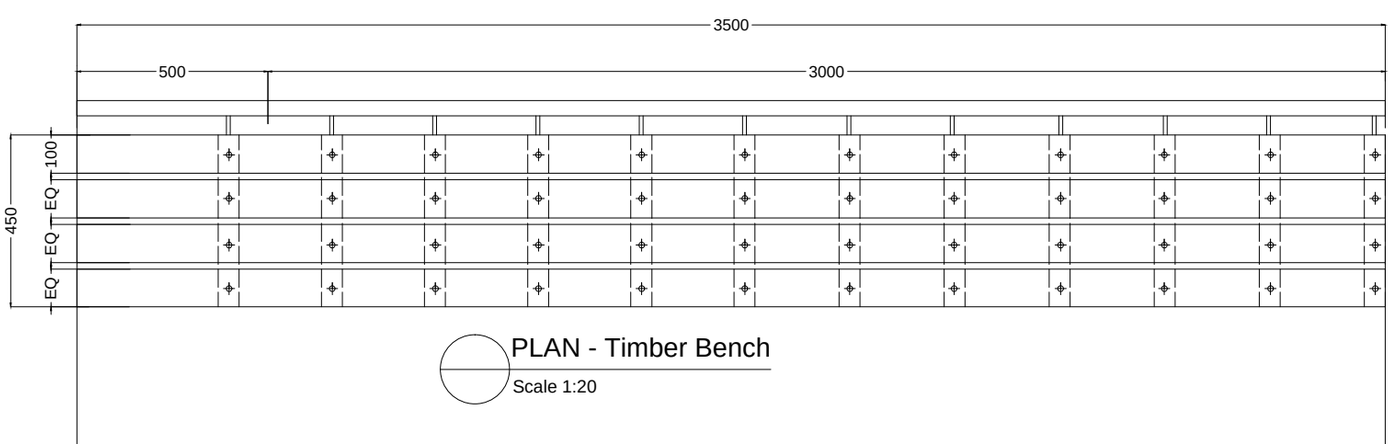

PLAN - Timber Bench
Scale 1:20

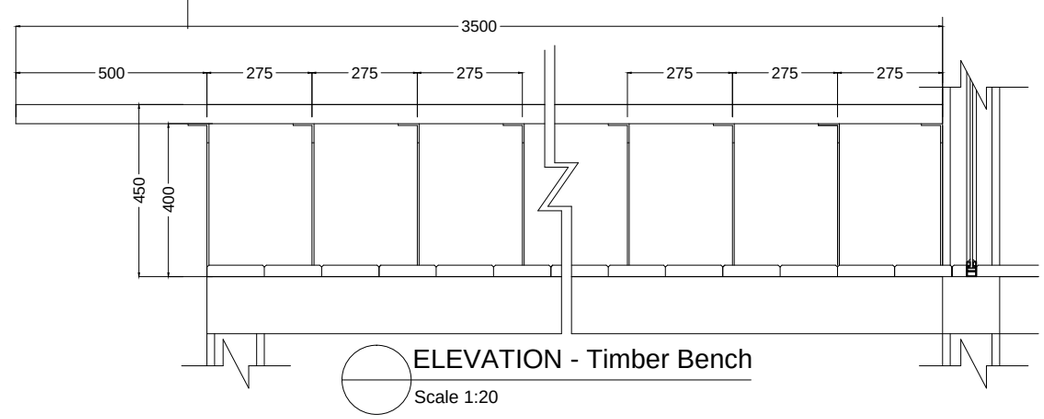

ELEVATION - Timber Bench
Scale 1:20