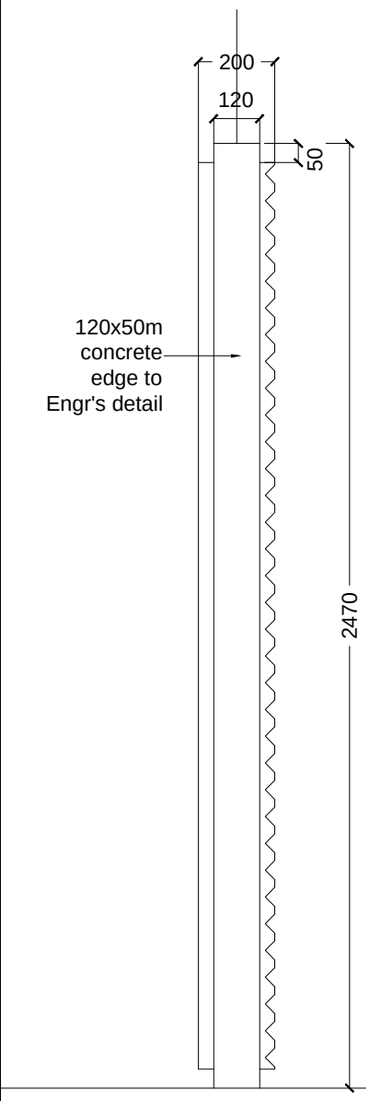


SIDE ELEVATION: FEATURE WALL
SCALE 1:20

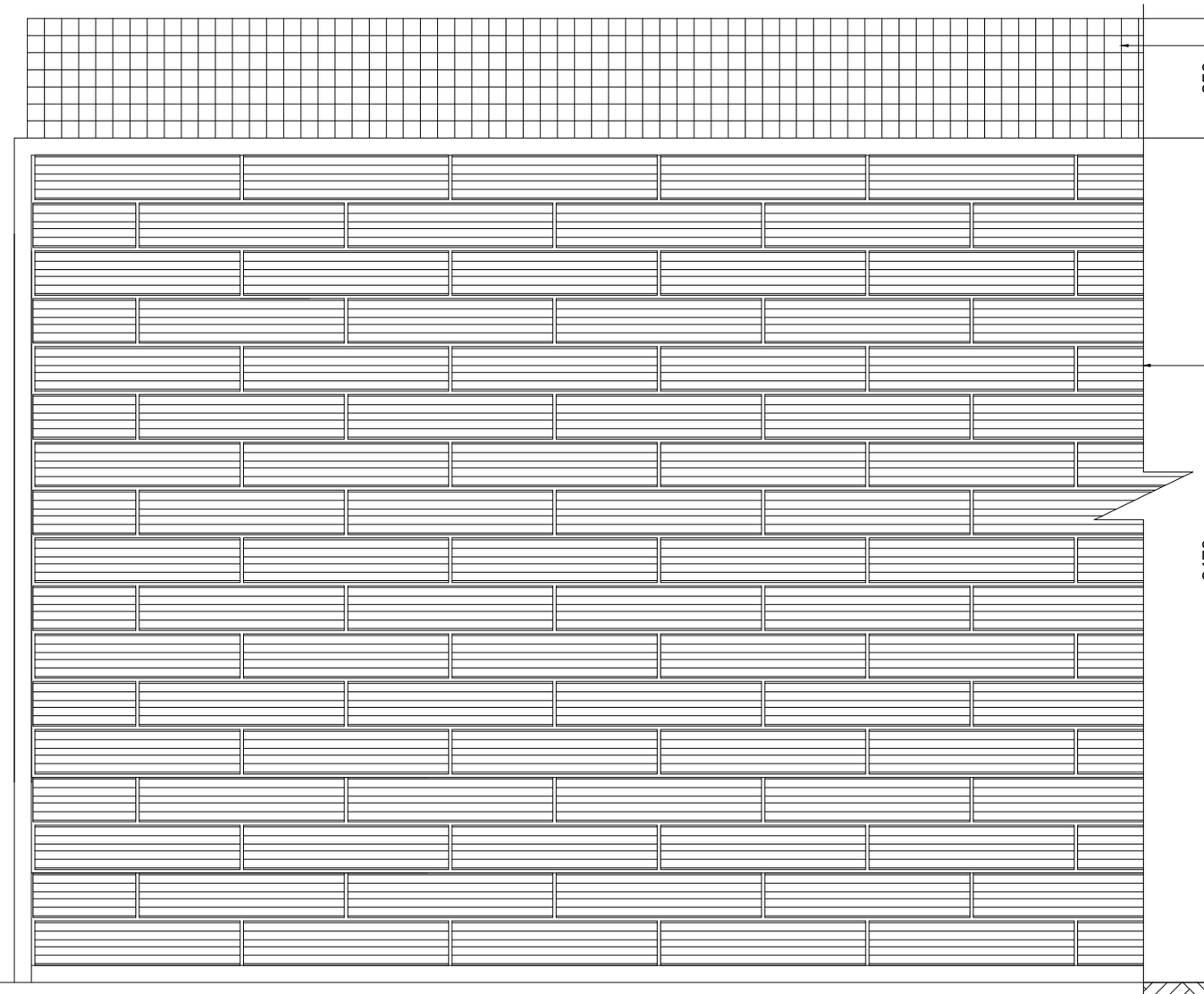


FRONT ELEVATION: FEATURE WALL
SCALE 1:20

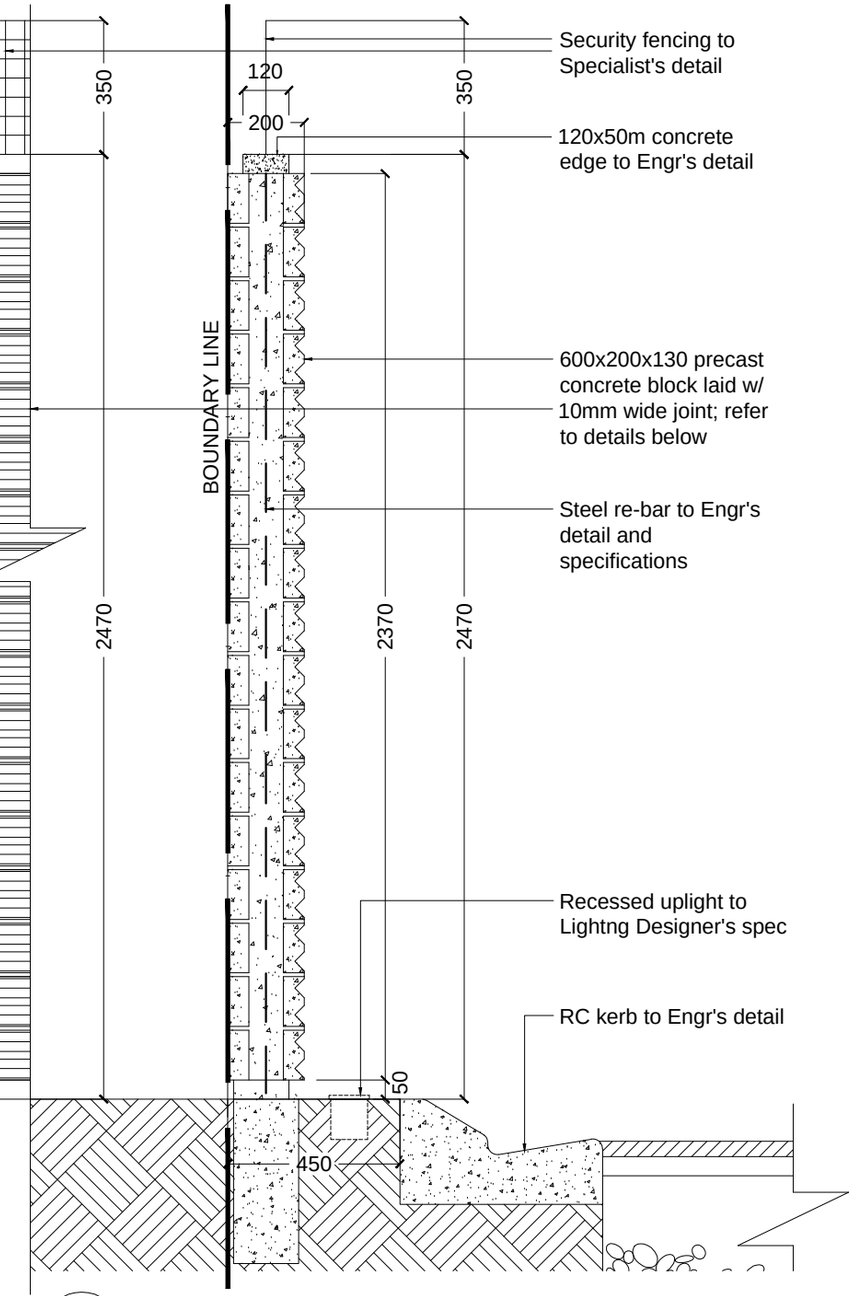


TYPICAL SECTION: FEATURE WALL
SCALE 1:20

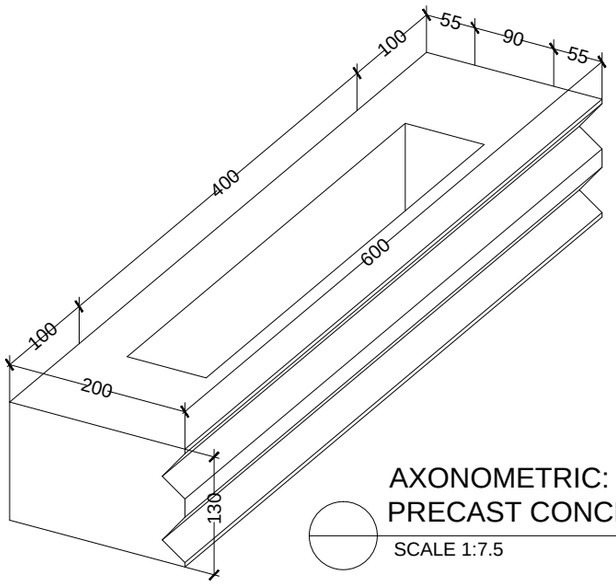


AXONOMETRIC: PRECAST CONCRETE BLOCK
SCALE 1:7.5

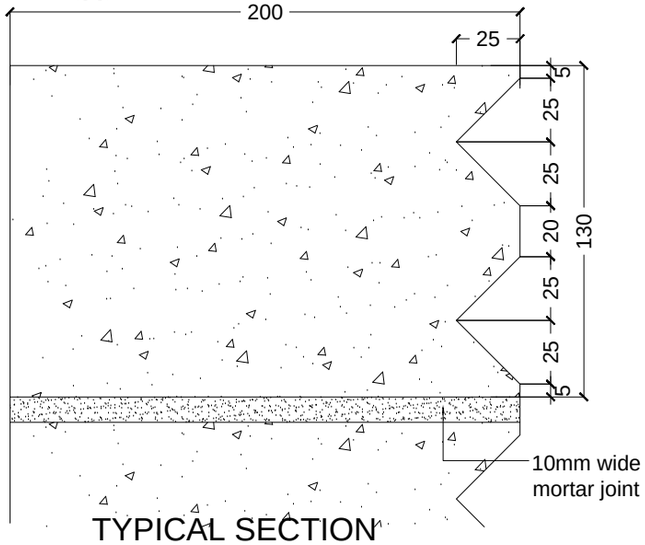


TYPICAL SECTION PRECAST CONCRETE BLOCK
SCALE 1:3