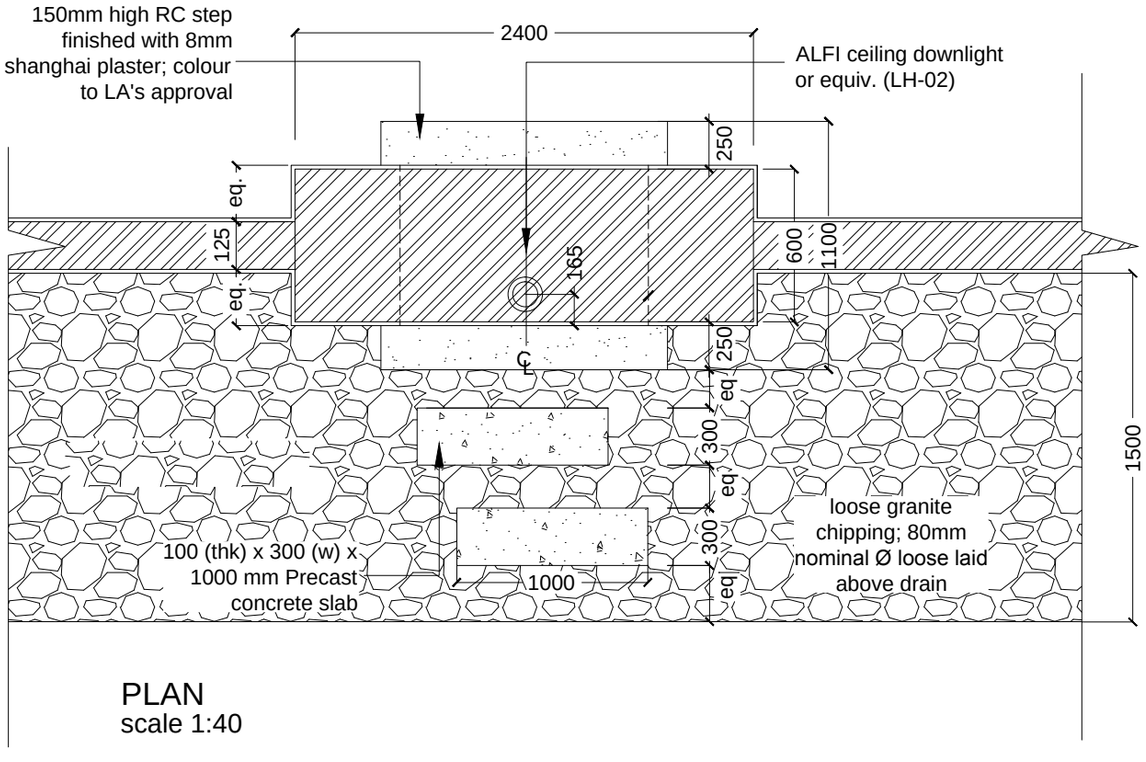

PLAN
scale 1:40

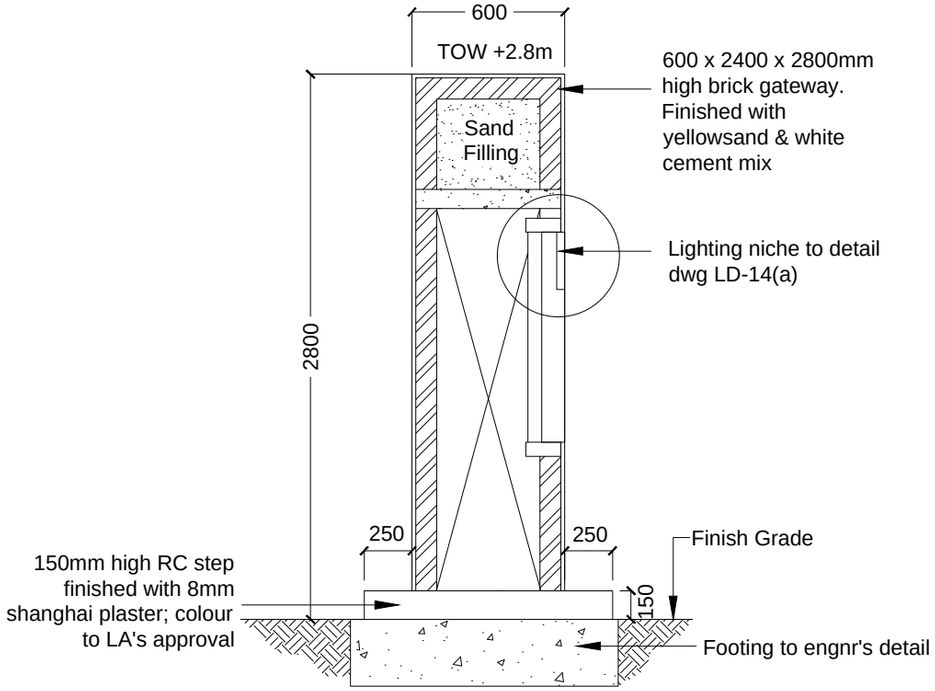

SECTION Y
scale 1:40

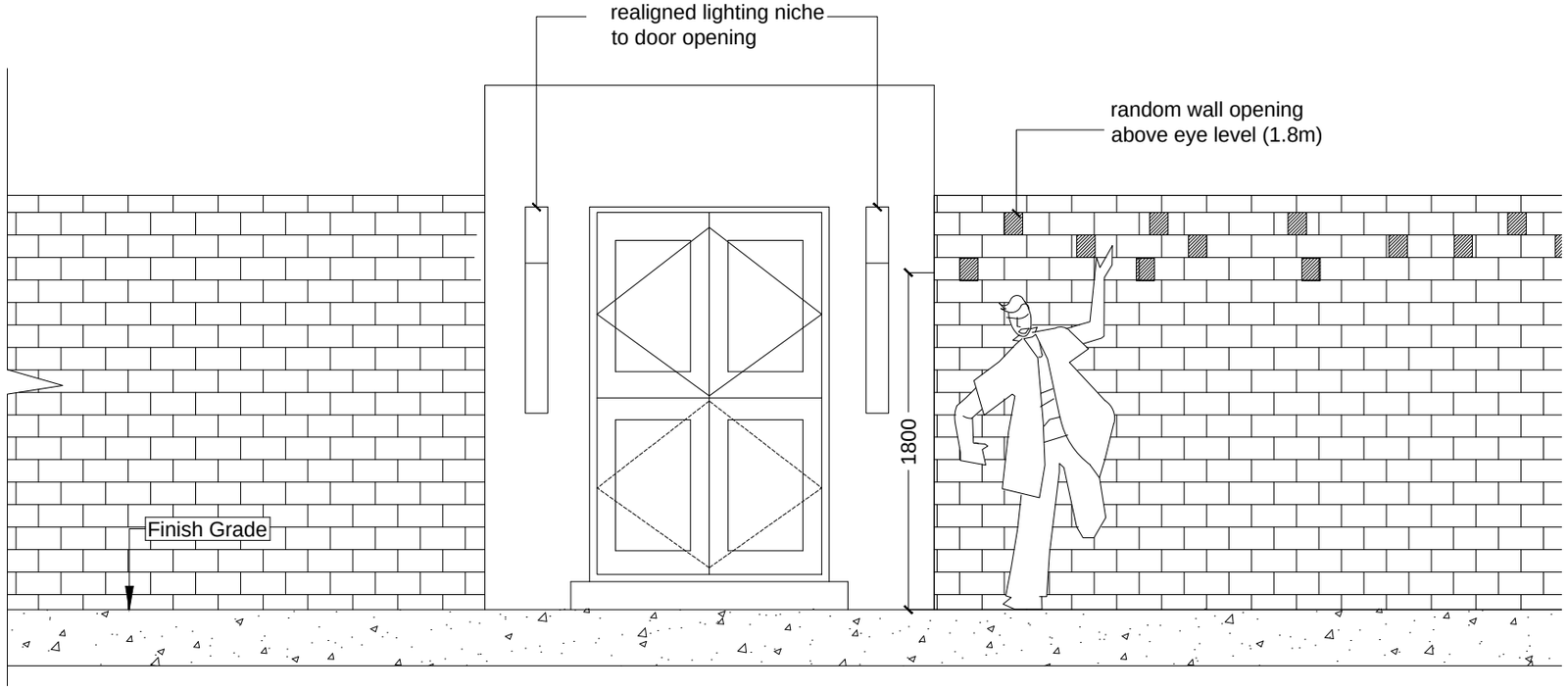

a UNIT'S GATEWAY WALL & TIMBER DOOR
scale 1:40